Andrews
Water Heaters

Flexistor. 400ltr, 500ltr, 800ltr, 1000ltr, 1250ltr, 1450ltr, 2000ltr, 2500ltr

Installation Manual

Unvented Flexistor Water Heaters
Installation & Servicing Instructions

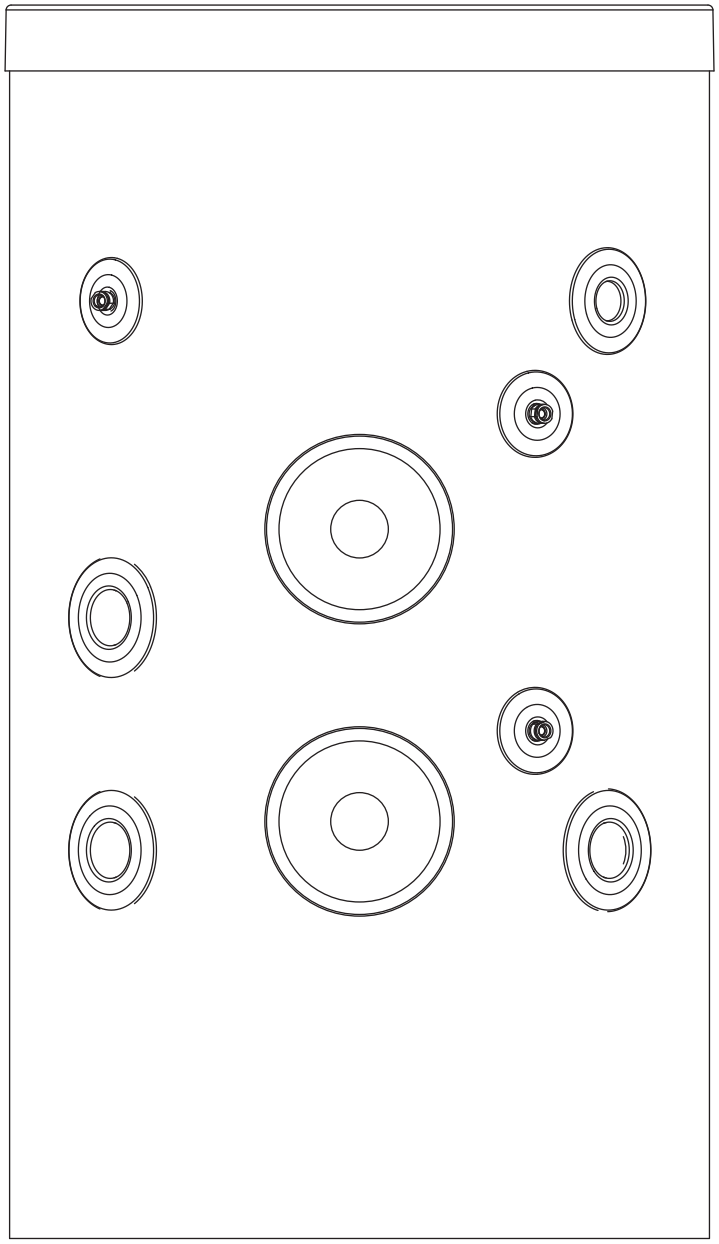

Important

Please read & understand all these instructions before commencing installation.
This cylinder range does not incorporate an internal heat exchanger.
Please leave this manual with the customer for future reference.

ANDREWS
WATER HEATERS

Contents

Product Specification 3
- Introduction 3
- General requirements 3
- THE BENCHMARK[tm] SCHEME 3
- Checklist 4
- Storage and handling 5
- Technical data 6
- ErP data information 6
- Immersion allocation table 10
- Thermostat control schematics 10
- Wiring Schematics 11
- Limitations 12
- Water supply 12

Installation & Commissioning 13
- General Installation 13
- Cold Water Supply 13
- Secondary circulation and De-Stratification 15
- Discharge Pipe work 19
- Direct Model 21
- Commissioning 22

Maintenance & Servicing 23
- Maintenance requirements 23
- Clean the strainer 23
- Fault finding 24
- Servicing 25
- Spares 26
- Accessories 27
- Spares drawings 28
- Benchmark check list 32
- Service Record 33

Warranty 34
- Lifetime Warranty Terms and Conditions 34

THE BENCHMARK[tm] SCHEME

Benchmark[tm] places responsibilities on both manufacturers and installers. The purpose is to ensure that customers are provided with the correct equipment for their needs, that it is installed, commissioned and serviced in accordance with the manufacturer's instructions by competent persons and that it meets the requirements of the appropriate Building Regulations. The Benchmark[tm] Checklist can be used to demonstrate compliance with Building Regulations and should be provided to the customer for future reference. Installers are required to carry out installation, commissioning and servicing work in accordance with the Benchmark[tm] Code of Practice which is available from the Heating and Hotwater Industry Council who manage and promote the Scheme. Visit www.centralheating.co.uk for more information.

IMPORTANT NOTE TO USER: PLEASE REFER TO THE USER GUIDE SECTION ON PAGES 34 FOR IMPORTANT INFORMATION WITH RESPECT TO THE BENCHMARK SCHEME

Product specification
Introduction
Congratulations on your purchase of a Andrews Flexistor unvented water heater. The Andrews Flexistor products are manufactured in the UK from top quality materials and meets all the latest relevant safety and constructional standards. The high grade Duplex stainless steel cylinder offers exceptional strength and corrosion resistance which is backed by a 30 year warranty* Its performance and insulation levels exceed the latest requirements of Building Regulation Part L.
The Andrews Flexistor unvented water heater can be fed directly from the cold water mains supply to the property without the need for separate feed cisterns or vent pipes. It is supplied complete with all its necessary inlet and safety controls.
The Andrews Flexistor cylinder range all require a separate expansion vessel to accommodate any expanded water.

General Requirements
IMPORTANT: Please read and understand this product guide before installing the Andrews Flexistor water heater. Incorrect installation may invalidate the warranty*.
The Andrews Flexistor must be Installed, Commissioned and Maintained by a competent installer in accordance with Building Regulation G3 (England and Wales), Technical Standard P3 (Scotland) or Building Regulation P5 (Northern Ireland) and the Water Fitting Regulations (England and Wales) or Water Byelaws (Scotland).
*** See Terms and Conditions of warranty**

THIS APPLIANCE CAN BE USED BY CHILDREN AGED FROM 8 YEARS AND ABOVE AND PERSONS WITH REDUCED PHYSICAL, SENSORY OR MENTAL CAPABILITIES OR LACK OF EXPERIENCE AND KNOWLEDGE IF THEY HAVE BEEN GIVEN SUPERVISION OR INSTRUCTION CONCERNING USE OF THE APPLIANCE IN A SAFE WAY AND UNDERSTAND THE HAZARDS INVOLVED. CHILDREN SHALL NOT PLAY WITH THE APPLIANCE. CLEANING AND USER MAINTENANCE SHALL NOT BE MADE BY CHILDREN WITHOUT SUPERVISION

WARNING: Do not switch on if there is a possibility that the water in the heater is frozen.

Also:

- water may drip from the discharge pipe of the pressure-relief device and this pipe must be left open to the atmosphere; (see page 19 for more details)

-the pressure-relief device is to be operated regularly to remove lime deposits and to verify that it is not blocked; (see page 23 for more details)

- how hot water can be drained. (see page 23 for more details)

- A discharge pipe connected to the pressure-relief device is to be installed in a continuously downward direction and in frost free environment; (see page 20 for details)

- details on how to set the temperature controls for immersion heaters can be found on pages 10.

Note: This Andrews Flexistor cylinder needs a minimum 100L/min water supply at open outlet.

Important Notice:

When installed with the KIWA approved unvented kit Andrews Flexistore cylinders are approved as meeting current water regulations.

To satisfy these regulations when the kit is not supplied it will be required that the installer ensures that all of the system components meet the required standards.

Checklist (if purchased through Heatrae Sadia)

Before commencing installation check that all the components for your Andrews Flexistor unit are contained in the package. The following components are supplied as standard with your Andrews Flexistor unit:

Commercial Cylinder Volume (ltr)	Pressure Reducing Valve	Pressure Relief Valve	Single Check Valve
400 - 500	1” Integrated inlet control valve		
800	1.25” (1.5 - 6 bar) or (5 -10 bar)	1” x 1.25” (8 bar) or (13 bar)	1.25”
1000	1.25” (1.5 - 6 bar) or (5 -10 bar)	1” x 1.25” (8 bar) or (13 bar)	1.25”
1250 - 1450	1.5” (1.5 - 6 bar) or (5 -10 bar)	1” x 1.25” (8 bar) or (13 bar)	1.5”
2000 - 2500	2” (1.5 - 6 bar) or (5 -10 bar)	1.25” x 1.5” (8 bar) or (13 bar)	2”

Table 1: Cold Water Inlet Control Kit (depending on model)

Commercial Cylinder Volume (ltr)	Expansion Vessel Size (ltr)	Mounting Kit	Weights
400 - 500	60	Floor Mounted	12kg
800	100	Floor Mounted	17kg
1000 - 1250	150	Floor Mounted	24kg
1450	200	Floor Mouinted	38.5kg
2000 - 2500	300	Floor Mounted	41kg

Table 2: Expansion Vessel Sizing

- Factory fitted Temperature & Pressure Relief Valve, set at 90ºC / 1 MPa (10bar) or factory fitted Temperature & Pressure Relief valve set at 90ºC / 1.5MPa (15bar) Depending on model. Connection size 1 1/4”BSP male to cylinder and 1 1/4” BSP female outlet.
- Tundish 1 1/4” inlet, 1 1/2” outlet
- Isolating Valve (2”)
- 1” Drain Valve.
- All connections BSP female.

Notes:
1” Integrated inlet control valve is not assembled.

Storage and Handling

Please take care when handling a packaged Andrews Flexistor. The unit is heavy and must only be moved manually within safe working practices. If the unit is to be stored before installation, it must be placed on a secure, level surface and in a dry, frost free environment.

Precautions to be carried out prior to commencement of work:

1. Tidy area ensuring there is safe access and egress to installation place, free from trip hazards.
2. Be aware of other people who may be in the area
3. Operate any machinery in accordance with training and operating instructions
4. Visually inspect the equipment prior to use, do not use damaged equipment.
5. Safe working practices are adopted for manual handling of appliances/parts
6. Correct PPE to be worn.

The Andrews Flexistor unit must be vertically floor mounted. It can be placed anywhere convenient provided the discharge pipe(s) from its safety valves can be correctly installed. Areas that are subject to freezing must be avoided. Ensure that the floor is level and of sufficient strength to support the “full” weight of the unit when filled with water (refer to Table 5 for unit weights). Pipe runs should be kept as short as possible for maximum economy. Access to associated controls, immersion heaters and indirect controls should be possible for servicing and maintenance of the system.

To aid installation, the Andrews Flexistor is provided with lifting points located at the top of the unit. To access the lifting eyes please remove the red outlet gromett and the top cover. The weights of the units are noted on Table 5.

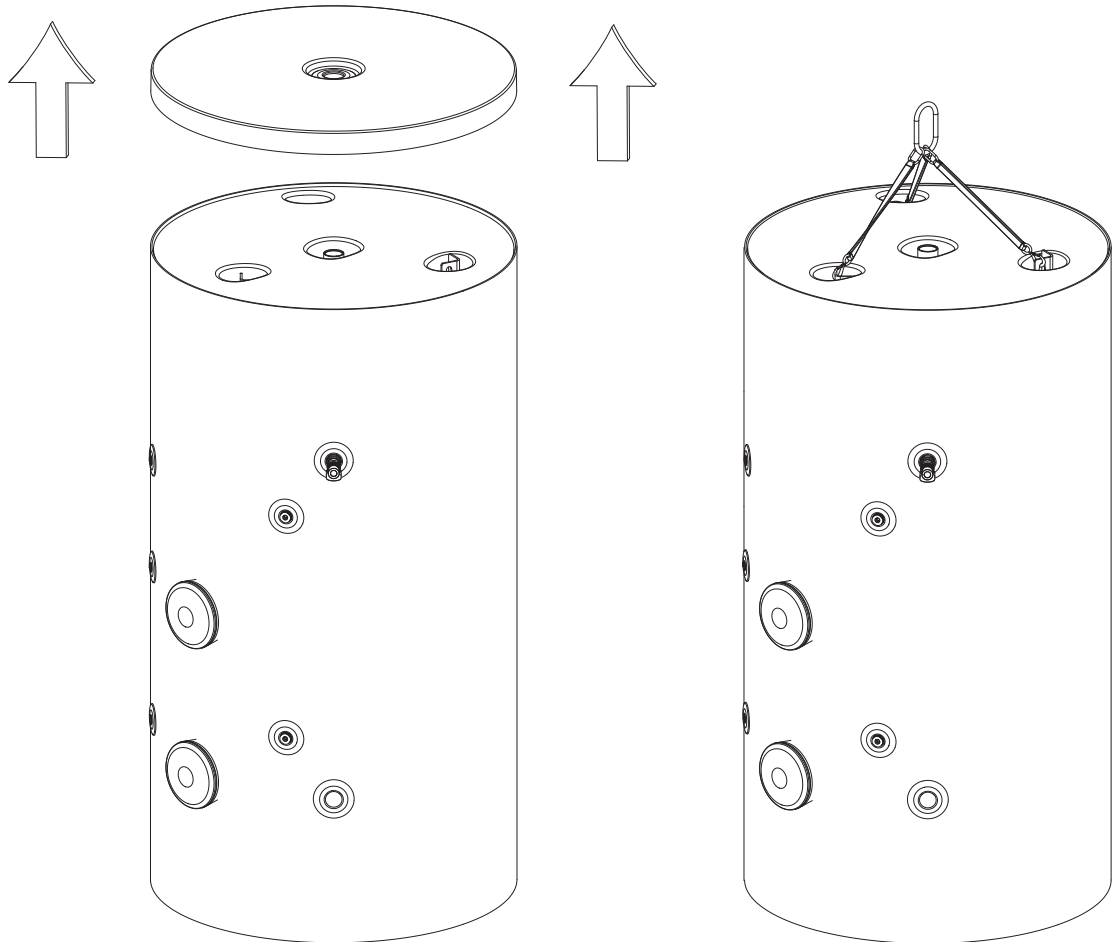

FIGURE 1: Lifting

Technical data (Indirect models in conformance with BS EN 12897:2006)

Maximum mains water supply pressure	2.5MPa (25 bar)
Operating pressure/PRV (low pressure system)	0.60MPa (6. bar)
Operating pressure/PRV (high pressure system)	1.00MPa (10 bar)
Expansion vessel pressure (low pressure system)	1.0MPa (10 bar max)
Expansion vessel pressure (high pressure system)	1.6MPa (16 bar max)
Expansion relief valve setting (low pressure system)	0.8MPa (8 bar)
Expansion relief valve setting (high pressure system)	1.3MPa (13 bar)
Maximum design pressure (low pressure system)	0.80MPa (8 bar)
Maximum design pressure (high pressure system)	1.3MPa (13 bar)
T&P relief valve setting	1.0MPa/90 °C (10 bar)
T&P relief valve setting	1.5MPa/90 °C (15 bar)
Immersion heater rating (a.c. supply only) single phase	6kW & 9kW 50/60Hz ~
Immersion heater rating (a.c. supply only) 3 phase (See Accessories on page 27 for full range)	12kW - 54kW 50/60Hz ~
Storage weights (empty and full)	See Table 4, Page 8
Heat loss table	See Table 6, Page 9

ErP data

ErP Data							
Model(s)	400	500	800	1000	1250	1450	2000
Energy efficiency class	B	C	C	C	C	C	C
Standing loss W	72.0	89.0	114.0	139.0	150.0	163.0	179.0
Storage volume V in Litres	400	500	800	1000	1250	1450	2000

Table 3: ErP Data Information

Technical parameters in accordance with European Commission regulations 814/2013 and 812/2013

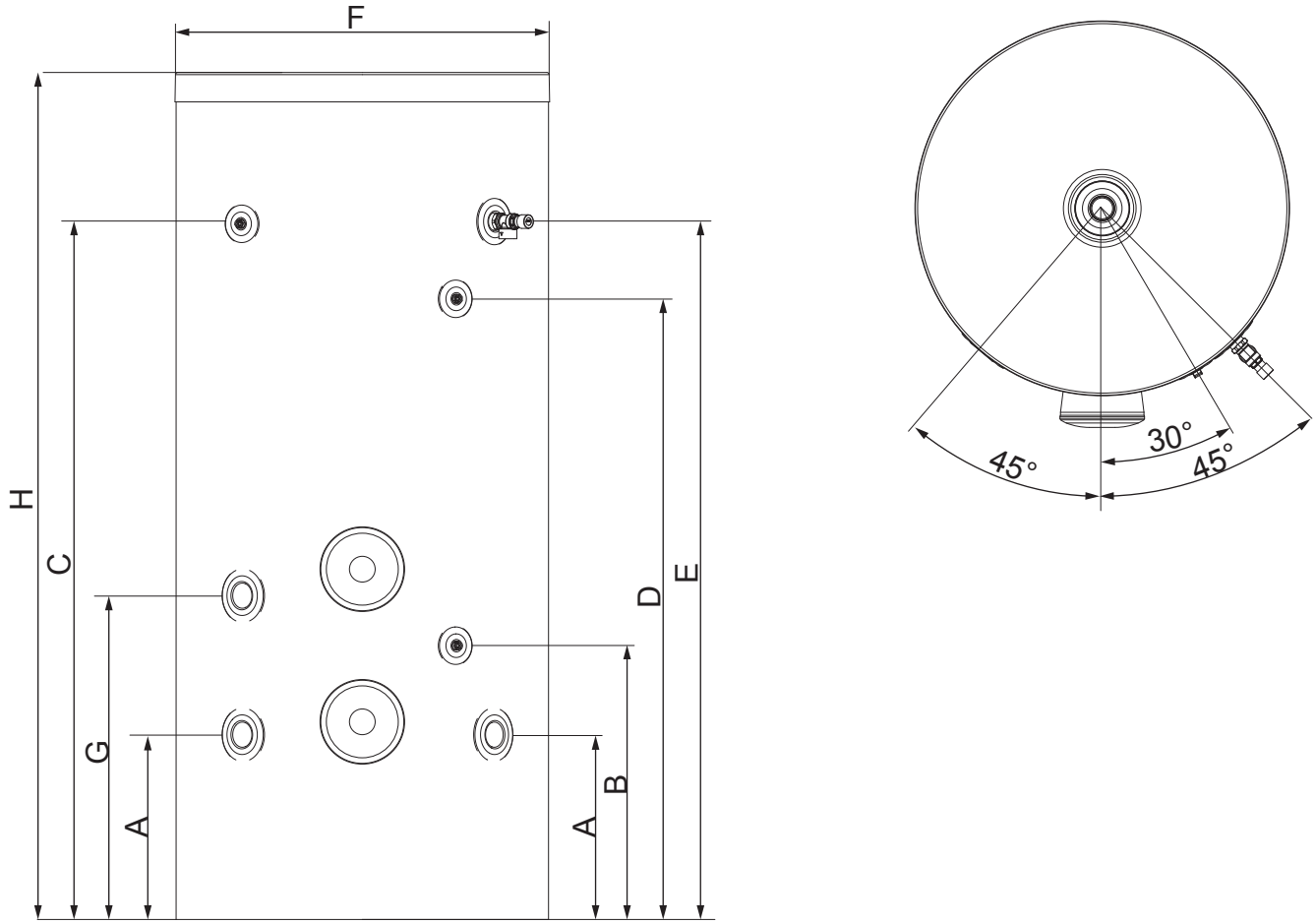

FIGURE 2: Flexistor Dimensions

	Connection 400 - 500L			Connection 800 - 1000L			Connection 1250 - 1450L			Connection 2000 - 2500L		
A	2” BSP	471	471	2” BSP	502	502	2” BSP	541	541	2”BSP	591	591
B	½”BSP	616	616	½”BSP	744	744	½”BSP	783	783	½”BSP	833	833
C	½”BSP	1138	1416	½”BSP	1502	1897	½”BSP	1466	1721	½”BSP	1493	1886
D	½”BSP	1001	1191	½”BSP	1263	1687	½”BSP	1326	1536	½”BSP	1376	1626
E	1 ¼” BSP	1138	1416	1 ¼” BSP	1502	1897	1 ¼” BSP	1466	1721	1 ¼” BSP	1493	1886
F	N/A	872	872	N/A	1024	1024	N/A	1224	1224	N/A	1470	1470
G	2” BSP	754	754	2” BSP	880	880	2” BSP	1042	1042	2” BSP	1077	1077
H	N/A	1535	1804	N/A	1906	2301	N/A	1936	2253	N/A	2014	2419

Table 4: Flexistor Dimensions

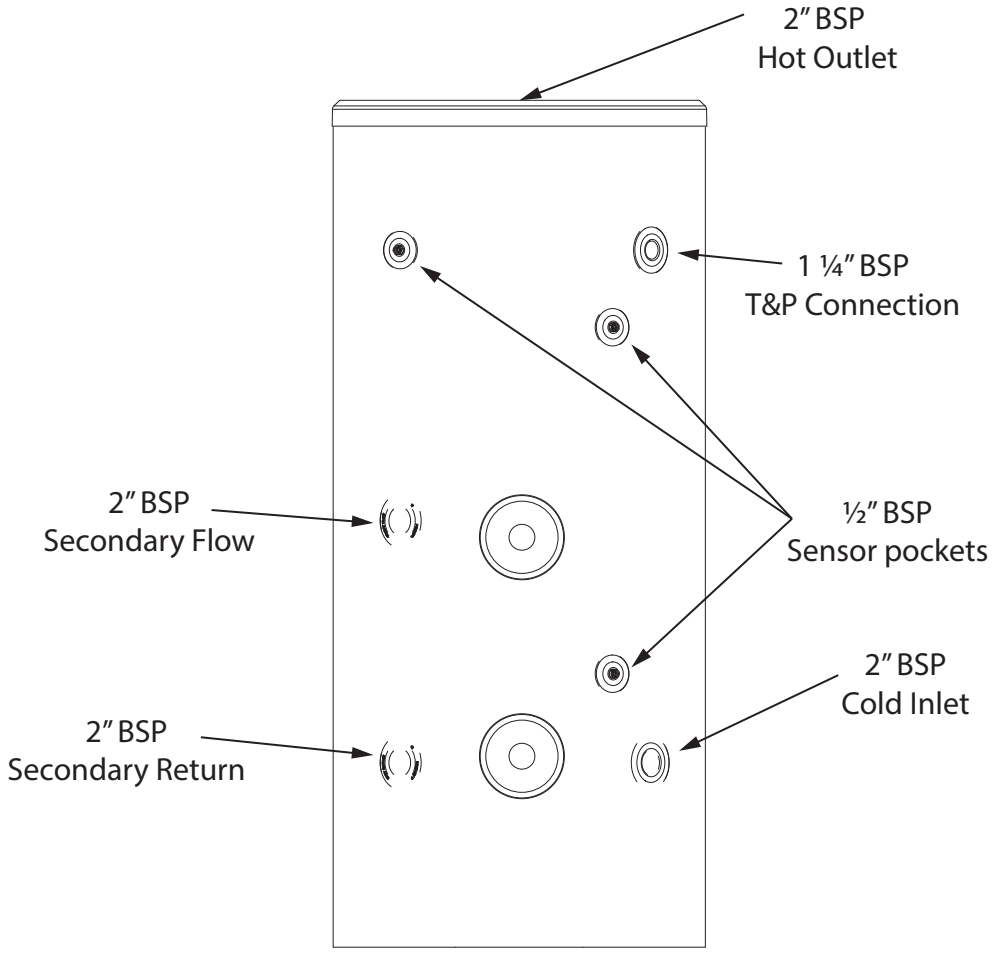

FIGURE 3: Flexistor Connections

NOTE: All connections BSP female threads

Nominal Capacity (Litres)	Unit Weight (kg)	
	Empty	Full
400	99	499
500	100	600
800	160	960
1000	180	1180
1250	297	1547
1450	304	1754
2000	415	2415
2500	421	2921

Table 5: Cylinder Weights

Nominal Capacity (Litres)	Per Day (kWh/24h)	Per Year kWh/24h)
400	1.72	627
500	2.14	781
800	2.74	1000
1000	3.33	1215
1250	3.60	1314
1450	3.90	1423
2000	4.30	1569
2500	4.50	1642

Table 6: Standing heat-loss

Testing is carried out to BS EN12897:2006

Nominal Capacity (Litres)	Maximum kW ratings		
	Lower boss	Upper boss	Total kW
400	30	9	39
500	45	12	57
800	45	18	63
1000	45	36	81
1250	54	30	84
1450	54	36	90
2000	54	36	90
2500	54	36	90

Table 7: Maximum kW ratings for auxiliary heating supply

Nominal Capacity (Litres)	Heat-Up Times		Nominal Capacity (Litres)	Heat-Up Times	
	Maximum kW	Heat-up Time (mins)		Maximum kW	Heat-up Time (mins)
400	39	32	1250	84	47
500	57	28	1450	90	51
800	63	40	2000	90	70
1000	81	39	2500	90	87

Table 8: Auxiliary heat up times based on maximum immersion input per cylinder

Notes:
Times based on nominal volume
Times base on 45°C temperature rise

Element		94110301		94110302		94110303		94110304		94110305		94110306		94110307		94110308		94110309	
Kw		6		9		12		18		24		30		36		45		54	
Location		Upper	Lower	Upper	Lower	Upper	Lower	Upper	Lower	Upper	Lower	Upper	Lower	Upper	Lower	Upper	Lower	Upper	Lower
Direct	400	✓	✓	✓	✓		✓		✓		✓		✓						
	500	✓	✓	✓	✓	✓	✓		✓		✓		✓		✓		✓		
	800	✓	✓	✓	✓	✓	✓	✓	✓		✓		✓		✓		✓		
	1000	✓	✓	✓	✓	✓	✓	✓	✓	✓	✓	✓	✓		✓		✓		
	1250	✓	✓	✓	✓	✓	✓	✓	✓	✓	✓	✓	✓		✓		✓		✓
	1450	✓	✓	✓	✓	✓	✓	✓	✓	✓	✓	✓	✓	✓	✓		✓		✓
	2000	✓	✓	✓	✓	✓	✓	✓	✓	✓	✓	✓	✓	✓	✓		✓		✓
	2500	✓	✓	✓	✓	✓	✓	✓	✓	✓	✓	✓	✓	✓	✓		✓		✓

Table 9: Immersion allocation

Note:
The Immersion(s) are not factory fitted.

Thermostat/Cut-out

All immersion heaters are fitted with a thermostat which is fitted in the centre of the heater plate and a cut-out which is fitted to the side of the thermostat. These MUST be wired in series with the operating coil circuit of the contactor (not supplied). See figures 4 below and figures 5 & 6, Page 11.

Maximum working temperature is 80°C/176°F. In very hard water areas limit to 60/65°C (140/150°F)

For optimal working conditions the thermal cut-out should be set to 80°C (factory set, if the seal is broken it may invalidate your warranty) and the thermostat should be set to 70°C max. If the thermostat is set above 70°C there could be instances nuisance tripping of the thermal cut-out.

Notes:
The 2 external contactors must be approved components certified for 10,000 cycles of operation for the contactor controlled by the thermostat and at least 30 for the contactor controlled by the none self-resetting thermal cut-out.

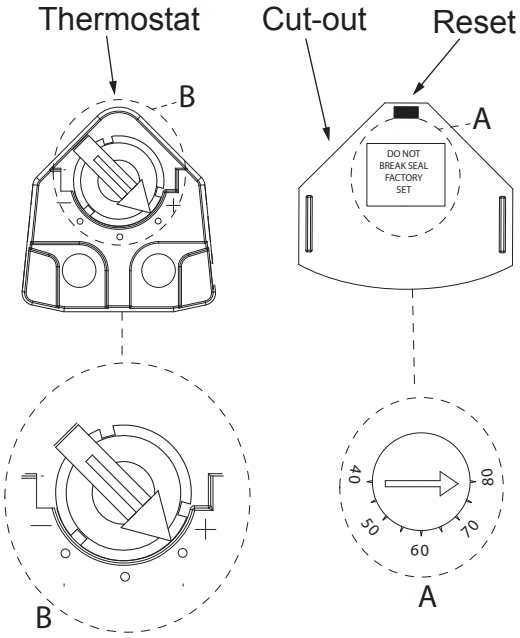

FIGURE 4: Thermostat and thermal cut-out settings

Wiring Schematic

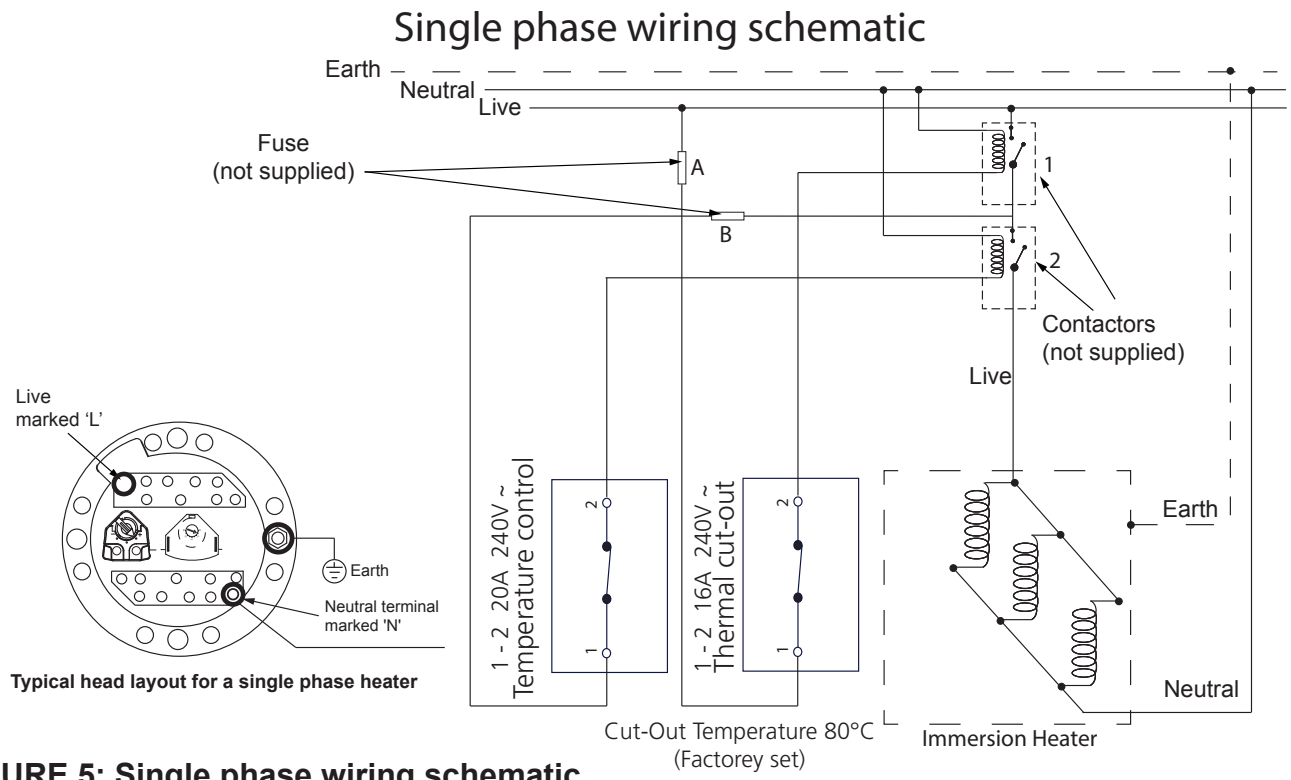

FIGURE 5: Single phase wiring schematic

Note:
The 2 external contactors must be approved components certified for 10,000 cycles of operation for the contactor controlled by the thermostat and at least 30 for the contactor controlled by the non-self-resetting thermal cut-out.

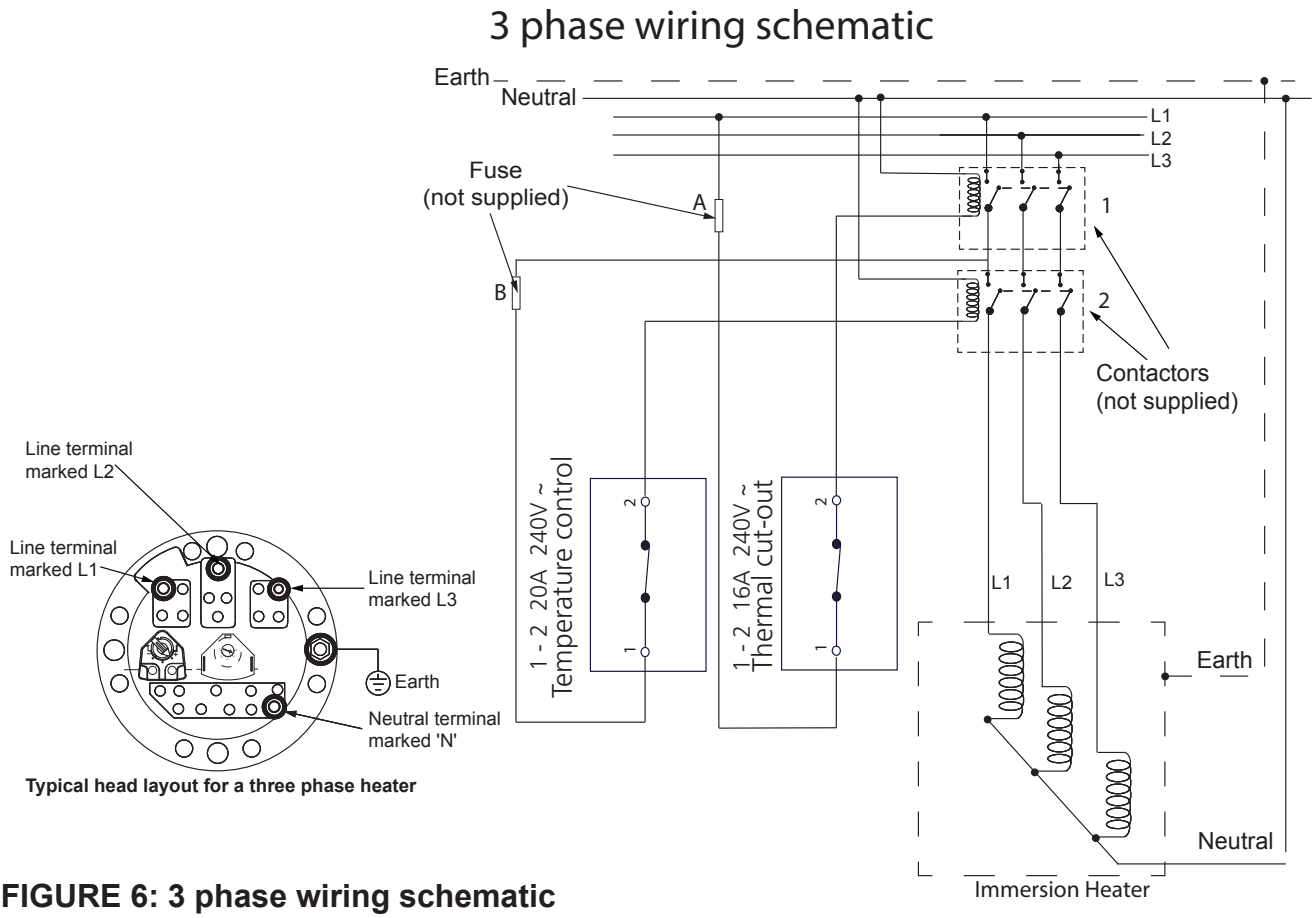

FIGURE 6: 3 phase wiring schematic

Limitations

- The Andrews Flexistor unvented water heater should not be used in any of the following instances:
- Solid fuel boilers or any other boiler in which the energy input is not under effective thermostatic control unless additional and appropriate safety measures are installed.
- Gravity circulation primaries.
- Steam heating plant unless additional and appropriate safety devices are installed.
- Ascending spray type bidets or any other Class 5 back syphonage risk requiring that a Type AA, AB, AD or AG air gap be employed.
- Water supplies that have either inadequate pressure or where the supply may be intermittent.
- Situations where it is not possible to safely pipe away any discharge from the safety valves.
- Areas where the water consistently contains a high proportion of solids, eg. suspended matter that could block the strainer, unless adequate filtration can be ensured.
- The installation must be carried out in accordance with the relevant requirements of the appropriate Building Regulations: either The Building Regulations (England), The Building Regulations (Scotland) or Building Regulations (Northern Ireland), The Water Fittings Regulations (England and Wales) or Water Byelaws (Scotland).

Water supply

Bear in mind that the mains water supply to the property will be supplying both the hot and cold water requirements simultaneously. It is recommended that the maximum water demand be assessed and the water supply checked to ensure this demand can be met. A minimum flow rate of 100l/min is required for the Andrews Flexistor range of cylinders

NOTE: A high mains water pressure will not always guarantee high flow rates.

Wherever possible the main supply pipe should be in 2”. The minimum mains water supply requirements should be 0.15 MPa (1.5 bar) working pressure and minimum 100 litres per minute flow rate. At these values outlet flow rates may be poor if several outlets are used simultaneously, the higher the available pressure and flow rate the better the system performance will be.

The water supply must be of wholesome water quality (Fluid Category 1 as defined by the Water Supply Regulations 1999). The Andrews Flexistor is to be used for the storage of wholesome water (max. 250mg/l chloride).
Note: In hard water areas it is recommended that service intervals are reduced to monitor scale build up on the immersion heaters.

Water container:
Duplex stainless steel. 100% pressure tested to 2.25 MPa (22.5 bar).

Installation & Commissioning

General installation

Pipe fittings
All pipe connections to the Andrews Flexistor are made via BSP female parallel threaded pipe connection directly to the unit.

Cold water supply
A 2”cold water supply is recommended, however, if a smaller supply exists which provides sufficient flow this may be used. More flow noise may be experienced from small bore pipes due to the increased water velocity through them. A minimum flow rate of 100l/min is required for the Andrews Flexistor range of cylinders

High flow cold water control pack (Low and high pressure)
The control pack consists of a pressure reducing valve with integral strainer, check valve, core unit and expansion relief valve. The pressure settings are adjustable for the low or high pressure valve sets. For the“low” pressure valve set the pressure reducing valve can be set between 1.5 and 6 bar. For the “high” pressure valve set the pressure can be set between 5 and 10 bar. For optimum performance the following installation instructions should be complied with.
Note: The expansion vessel pressure must be set in accordance with the inlet pressure set on the pressure reducing valve by the installer. Set the Expansion Vessel pressure before pressurising the cylinder.

Installation
Flush supply pipe work before connection to remove all flux and debris prior to fitting the inlet controls. Failure to do this may result in irreparable damage to the controls and will invalidate the warranty.
The pressure reducing valve can be fitted in any orientation to suit the installation as long as it is fitted in the correct flow direction. Check the flow arrows on the side of the body.
The expansion relief valve should be installed with the discharge pipe work in either the horizontal position or facing downwards, if the discharge pipe is facing upwards debris may be deposited on the seat of the valve when in operation.

The blank plastic plugs in the body of the pressure relief valve are pressure gauge connections to enable pressure monitoring to be carried out, should the system develop a fault. It is recommended that these be accessible (the pressure reducing valve has two – only one need be accessible).
Expansion relief discharge pipe work must be connected to a safe visible discharge point via a tundish and the pipe work must have a continuous fall. If site conditions allow, the expansion relief discharge pipe work can be connected to the T&P valve discharge pipe work before the tundish.

Pressure reducing valve
The pressure reducing valve can be connected anywhere on the cold water mains supply prior to the Andrews Flexistor unit. There is no requirement to site it close to the unit, it can be located at a point where the mains supply enters the premises if this is more convenient but you must install a non-return valve just after the reducing valve for ease of maintenance. The pressure reducing valve incorporates a adjustable pressure reducer / strainer. The valve can be fitted in any orientation to suit the installation, however, ensure that the valve is installed with the direction of flow arrows (stamped on the side of the brass body) pointing towards the Andrews Flexistor cylinder

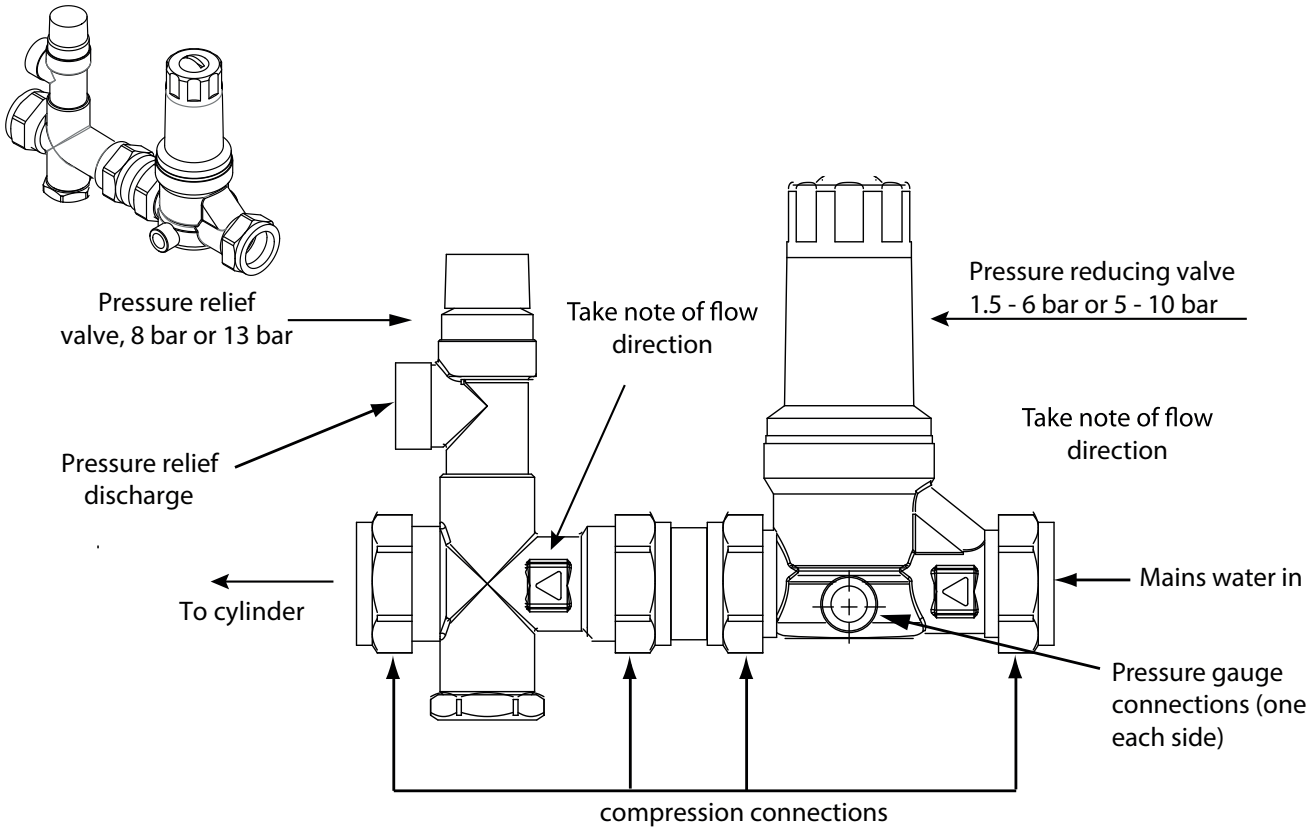

Figure 07: Cold water combination valve (for 400 & 500ltr)

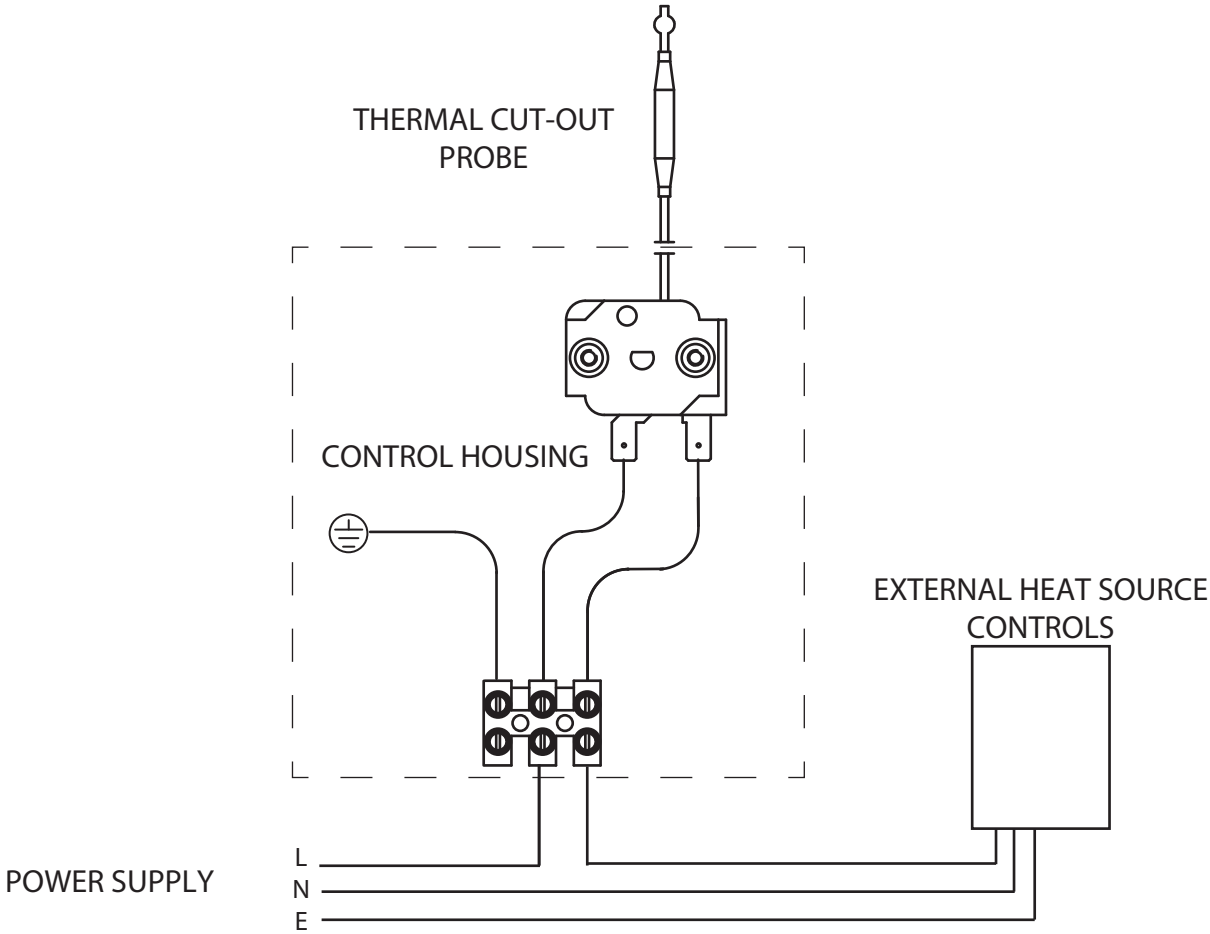

Figure 08: External heat source Thermal Cut-out

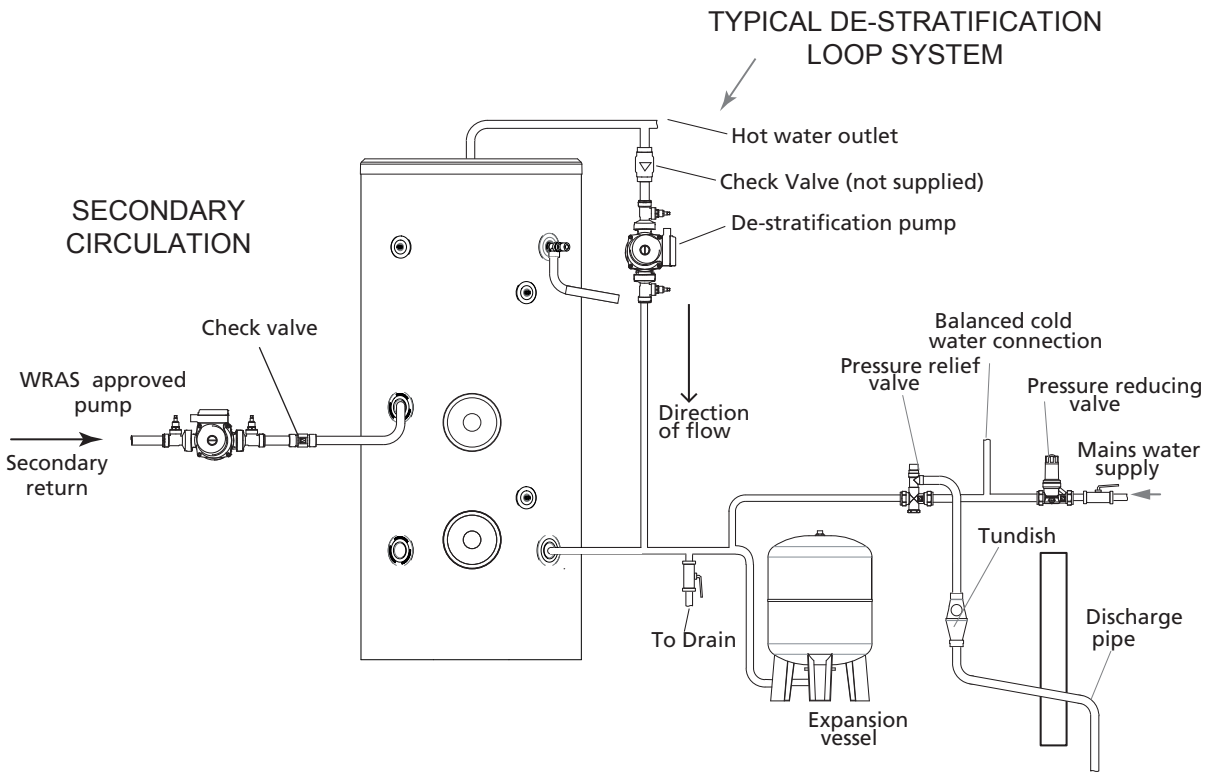

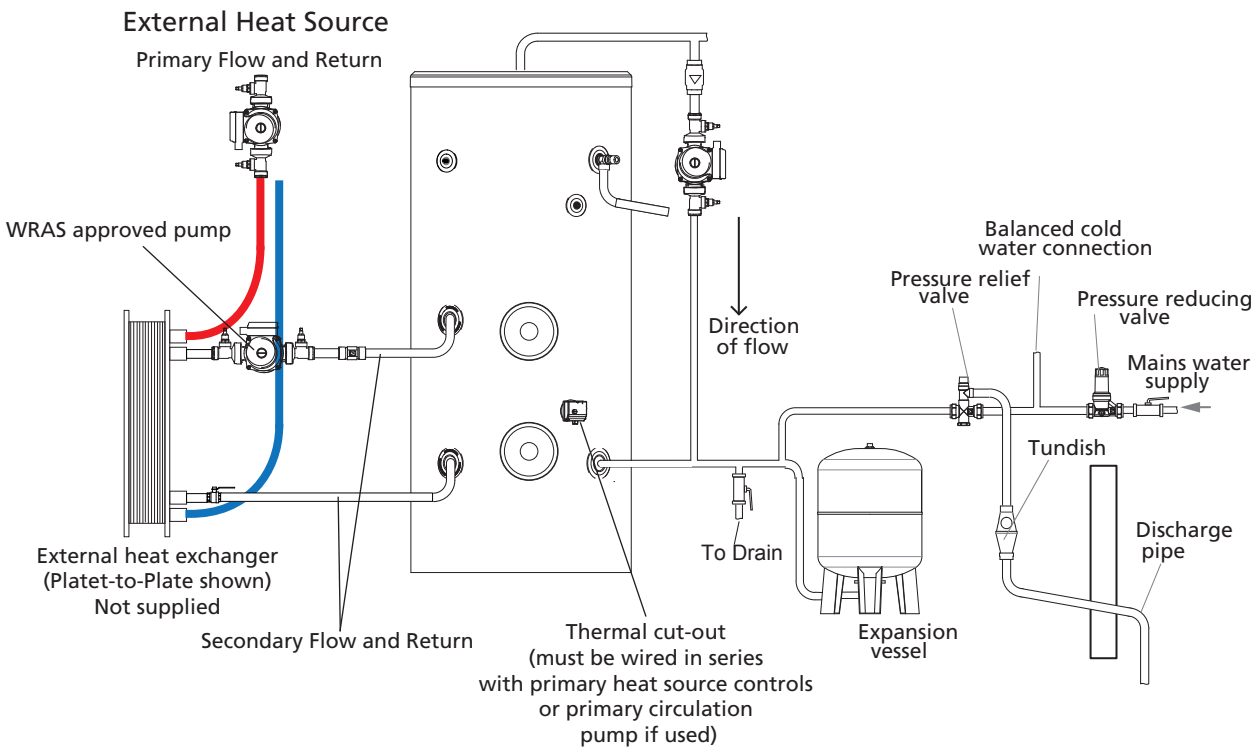

Notes:
1. Primary heat source must be able to cope with working pressure of cylinder.
2. Secondary flow and return is wholesome water only.
3. There is no internal heat exchanger fitted
   to this cylinder range.

Please note, that these are typical installations and
other options are permissable

Figure 09: Schematic installations

Pressure Relief Valve
This should be installed between the Pressure Reducing Valve and the Andrews Flexistor cylinder. Should a balanced pressure cold water draw off supply be required for the cold water outlets, this should be taken off between the Pressure Reducing Valve and Pressure Relief Valve.
Branches to drinking water outlets should be taken before the Pressure Relief Valve to avoid the possibility of warm expanded water being drawn from the tap.

Drain valve
It is recommended that the drain valve (supplied) be incorporated into the cold water inlet system, Figure 09, page 15. It is recommended that the outlet point of the drain pipe work be at least 1 metre below the level of the heater (this can be achieved by attaching a hose pipe to the drain valve outlet spigot).

Outlet Pipe work
Ideally the pipe work from the Andrews Flexistor to the outlet fittings should be in 2" pipe, smaller bore pipe can be used but it could impact on the performance of the unit. Small bore pipe can also be used to suit some taps, but runs should be of minimum length. Pipe sizes may vary due to system design.

Secondary Circulation
If a secondary circulation system is required it is recommended that it be connected to the Andrews Flexistor similar to Figure 9, page 15. The secondary return pipe should be in 28mm pipe and incorporate a check valve to prevent back flow, smaller pipe diameters can be used but may have a reduced flow. A suitable WRAS approved circulation pump will be required. On large systems, due to the increase in system water content, it may be necessary to fit additional expansion volume to the secondary system by fitting an external expansion vessel to the circuit. This should be done if the capacity of the secondary circuit exceeds 10 litres.

De-stratification kits
The correct size of de-stratification kit must be used with your cylinder to ensure the volume can be circulated in 1 hour. The pump instructions will need to be reviewed for information on the correct setting. Please follow the installation schematic (Figure 9, page 15) for guidance. When the system circulates it needs to be specified by the installer to ensure water is not drawn off during the de-stratification process. If a hot water demand is required during this period cold water may be discharged from the hot outlet. It is recommended that a check valve be installed before the pump to stop any risk of cold water draw off through the pump when it is not in use. For guidance on installation please refer to Figure 9, page 15.

External heat source
If an external heat source is connected the cylinder the control to the heat source must be wired via the over temperature cut-out supplied with the cylinder, alternatively it can be wired to the Primary circulation pump. This is to stop the external heat source from creating extreme temperatures within the cylinder. The secondary circulation must be wholesome water as there is no internal heat exchanger fitted to this cylinder range.
The external heat source, if connected, must be able to withstand the cylinder working pressures

Tundish
The tundish should not be located adjacent to any electrical components.

Pipe capacities (copper)
22mm o/d = 0.38 litres per metre run (10 litres = 26m)
28mm o/d = 0.55 litres per metre run (10 litres = 18m)
35mm o/d = 0.83 litres per metre run (10 litres = 12m)
42mm o/d = 1.23 litres per meter run (10 litres = 8m)

The following extract is taken from latest G3 Regulations

Discharge pipes from safety devices

Discharge pipe D1

3.50 Safety devices such as ***temperature relief valves or combined temperature and pressure relief valves*** (see paragraphs 3.13 or 3.18) should discharge either directly or by way of a manifold via a short length of metal pipe (D1) to a ***tundish.***

3.51 The diameter of discharge pipe (D1) should be not less than the nominal outlet size of the safety device, e.g. ***temperature relief valve***.

3.52 Where a manifold is used it should be sized to accept and discharge the total discharge from the discharge pipes connected to it.

3.53 Where valves other than a ***temperature and pressure relief valve*** from a single unvented hot water system discharge by way of the same manifold that is used by the safety devices, the manifold should be factory fitted as part of the ***hot water storage system unit*** or package.

Tundish

3.54 The ***tundish*** should be vertical, located in the same space as the unvented ***hot water storage system*** and be fitted as close as possible to, and lower than, the safety device, with no more than 600mm of pipe between the valve outlet and the ***tundish*** (see Diagram 1).

Note: To comply with the Water Supply (Water Fittings) Regulations, the tundish should incorporate a suitable air gap.

3.55 Any discharge should be visible at the tundish. In addition, where discharges from safety devices may not be apparent, e.g. in dwellings occupied by people with impaired vision or mobility, consideration should be given to the installation of a suitable safety device to warn when discharge takes place, e.g. electronically operated.

Discharge pipe D2

3.56 The discharge pipe (D2) from the ***tundish*** should:

a. have a vertical section of pipe at least 300mm long below the tundish before any elbows or bends in the pipework (see Diagram 1); and

b. be installed with a continuous fall of at least 1 in 200 thereafter.

3.57 The discharge pipe (D2) should be made of:

a. metal; or

b. other material that has been demonstrated to be capable of safely withstanding temperatures of the water discharged and is clearly and permanently marked to identify the product and performance standard (e.g. as specified in the relevant part of BS 7291- 1:2006 Thermostatic pipes and fittings for hot and cold water for domestic purposes and heating installations in buildings. General requirements).

3.58 The discharge pipe D2 should be at least one pipe size larger than the nominal outlet size of the safety device unless its total equivalent hydraulic resistance exceeds that of a straight pipe 9m long, i.e. for discharge pipes between 9m and 18m the equivalent resistance length should be at least two sizes larger than the nominal outlet size of the safety device; between 18 and 27m at least 3 sizes larger, and so on; bends must be taken into account in calculating the flow resistance. See Diagram 1, Table 3.1 and the worked example.

Note: An alternative approach for sizing discharge pipes would be to follow Annex D, section D.2 of BS 6700:2006 + A1:2009 Specification for design, installation, testing and maintenance of services supplying water for domestic use within buildings and their curtilages.

3.59 Where a single common discharge pipe serves more than one system, it should be at least one pipe size larger than the largest individual discharge pipe (D2) to be connected.

3.60 The discharge pipe should not be connected to a soil discharge stack unless it can be demonstrated that the soil discharge stack is capable of safely withstanding temperatures of the water discharged, in which case, it should:

a. contain a mechanical seal, not incorporating a water trap, which allows water into the branch pipe without allowing foul air from the drain to be ventilated through the ***tundish;***

b. be a separate branch pipe with no ***sanitary appliances*** connected to it;

c. if plastic pipes are used as branch pipes carrying discharge from a safety device, they should be either polybutalene (PB) or crosslinked polyethylene (PE-X) complying with national standards such as Class S of BS 7291-2:2006 or Class S of BS 7291-3:2006 respectively; and

d. be continuously marked with a warning that no ***sanitary appliances*** should be connected to the pipe.

Notes:

1. Plastic pipes should be joined and assembled with fittings appropriate to the circumstances in which they are used as set out in BS EN ISO 1043-1:2002 Plastics. Symbols and abbreviated terms. Basic polymers and their special characteristics.

2. Where pipes cannot be connected to the stack it may be possible to route a dedicated pipe alongside or in close proximity to the discharge stack.

Termination of discharge pipe

3.61 The discharge pipe (D2) from the tundish should terminate in a safe place where there is no risk to persons in the vicinity of the discharge.

3.62 Examples of acceptable discharge arrangements are:

a. to a trapped gully with the end of the pipe below

a fixed grating and above the water seal;

b. downward discharges at low level; i.e. up to 100mm above external surfaces such as car parks, hard standings, grassed areas etc. are acceptable providing that a wire cage or similar guard is positioned to prevent contact, whilst maintaining visibility; and,

c. discharges at high level: e.g. into a metal hopper and metal downpipe with the end of the discharge pipe clearly visible or onto a roof capable of withstanding high temperature discharges of water and 3 m from any plastic guttering system that would collect such discharges.

3.63 The discharge would consist of high temperature water and steam. Asphalt, roofing felt and nonmetallic rainwater goods may be damaged by such discharges.

Discharge Pipe work
It is a requirement of Building Regulations that any discharge from an unvented system is conveyed to where it is visible, but will not cause danger to persons in or about the building. The tundish and discharge pipes should be fitted in accordance with the requirements and guidance notes of Building Regulations. Building Regulation G3 Requirements and Guidance section 2 (page 17) are reproduced in the previous sections.

For discharge pipe arrangements not covered by G3 Guidance advice should be sought from your local Building Control Officer. Any discharge pipe connected to the pressure relief devices (Expansion Valve and Temperature / Pressure Relief Valve) must be installed in a continuously downward direction and in a frost free environment.
The water may drip from the discharge pipe of the pressure relief device and that this pipe must be left open to the atmosphere. The pressure relief device is to be operated regularly to remove lime deposits and to verify that it is not blocked.

G3 Requirement
"...there shall be precautions...to ensure that the hot water discharged from safety devices is safely conveyed to where it is visible but will not cause danger to persons in or about the building".

Worked example of discharge pipe sizing (Taken from Building Regulations 2000, G3, 2010 edition)
The example below is for a G1" temperature relief valve with a discharge pipe (D2) having 4 No. elbows and length of 7m from the tundish to the point of discharge.
From Table 5:
Maximum resistance allowed for a straight length of 35mm copper discharge pipe (D2) from a G1" temperature relief valve is 9m.
Subtract the resistance for 4 No. 35mm elbows at 1.4m each = 5.6m
Therefore the permitted length equates to: 3.4m
3.4m is less than the actual length of 7m therefore calculate the next largest size.
Maximum resistance allowed for a straight length of 42mm pipe (D2) from a G1" temperature relief valve equates to 18m.
Subtract the resistance of 4 No. 42mm elbows at 1.7m each = 6.8m
Therefore the maximum permitted length equates to: 11.2m
As the actual length is 7m, a 42mm (D2) copper pipe will be satisfactory.

Warnings
1. Under no circumstances should the factory fitted Temperature /Pressure Relief Valve be removed other than by authorised Heatrae Sadia personnel. To do so will invalidate any guarantee or claim.
2. The Cold Water Combination Valve must be fitted to the mains water supply to the Andrews Flexistor unit.
3. No control or safety valves should be tampered with or used for any other purposes.
4. Water may drip from the discharge pipe of the pressure relief device (Expansion Valve) and this pipe must be left open to atmosphere. The discharge pipe should not be blocked or used for any other purpose.
5. The tundish must be installed so that it is visible to the end user.
6. The tundish and drain valve must be installed away from any electrical components.
7. No valve should be fitted between the 8 bar or 13 bar pressure relief valve and the Andrews Flexistor unit.

Notes:

1) Discharge pipe-work D2 can now be a plastic pipe but only pipes that have been tested to a minimum 110°C must be used.

2) Discharge pipe D2 can now be plumbed in the soil stack but only soil stacks that can handle temperatures of 99°C or greater should be used.

VALVE OUTLET SIZE	MINIMUM SIZE OF DISCHARGE PIPE D1	MINIMUM SIZE OF DISCHARGE PIPE D2 FROM TUNDISH	MAXIMUM RESISTANCE ALLOWED, EXPRESSED AS A LENGTH OF STRAIGHT PIPE (I.E. NO ELBOWS OR BENDS	RESISTANCE CREATED BY EACH ELBOW OR BEND
G 1/2	15mm	22mm 28mm 35mm	UP TO 9m UP TO 18m UP TO 27m	0.8m 1.0m 1.4m
G 3/4	22mm	28mm 35mm 42mm	UP TO 9m UP TO 18m UP TO 27m	1.0m 1.4m 1.7m
G 1	28mm	35mm 42mm 54mm	UP TO 9m UP TO 18m UP TO 27m	1.4m 1.7m 2.3m

Table 10 Sizing of copper discharge pipe "D2" for common T&P Relief Valve sizes.

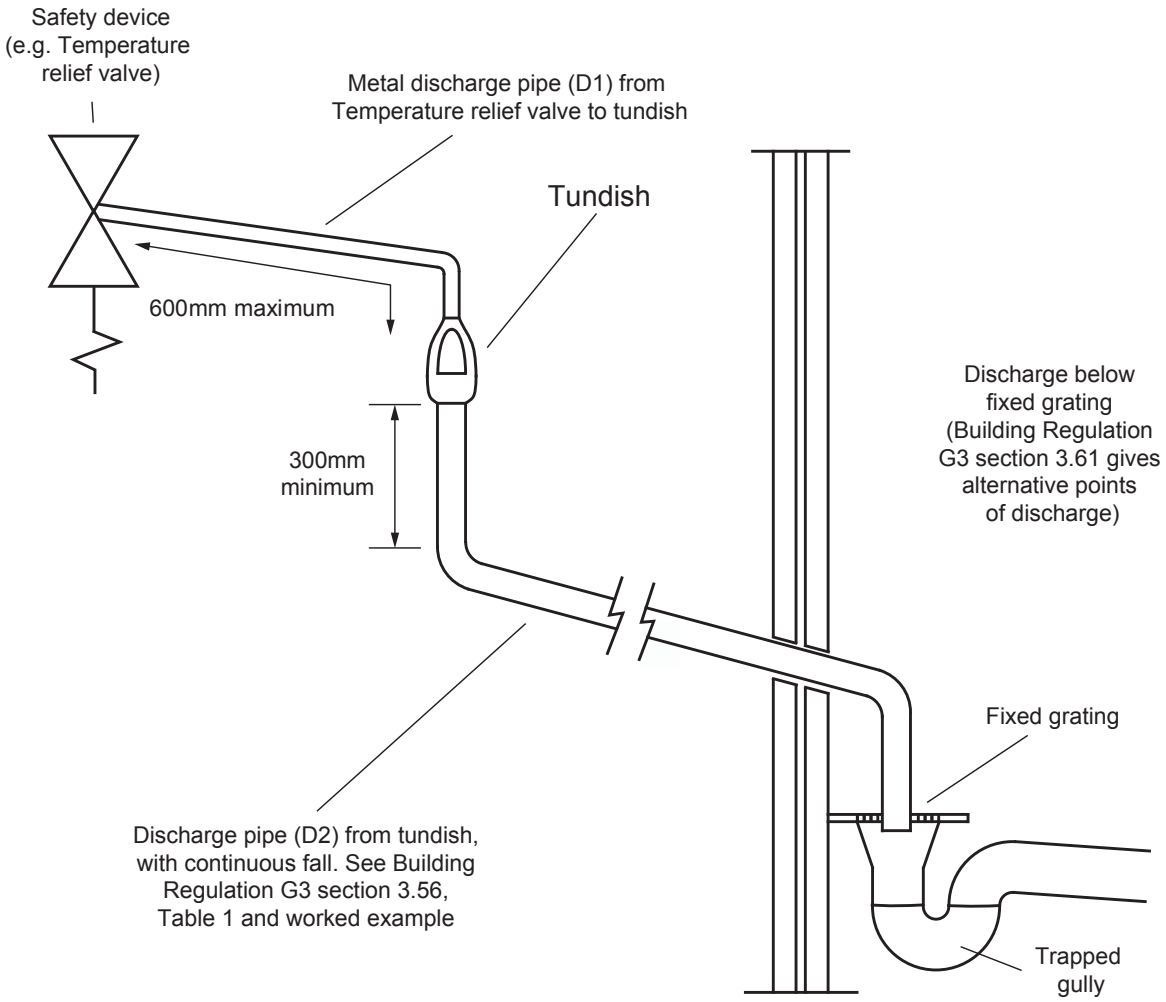

Figure 10: Typical discharge pipe arrangement (Extract from Building Regulations G3 Guidance section 3.5 to 3.63)

Immersion Heater(s)
The Andrews Flexistor can be fitted with a selection of single phase and three phase immersion heaters (see Table 7, page 9 and element allocation Table 9, page 10 for details). The immersion heaters must be installed in accordance with the installation instructions supplied with the immersion heater (supplied separately)

Warning: Before starting any work on the commercial immersion heaters switch off all electrical supplies to such immersion heaters including thermostatic controls, these may be on a separate circuit.

To remove the immersion heater:
Drain down the cylinder before any work is carried out on the Immersion heaters. Remove the immersion heater cover and disconnect all wiring from the immersion and thermostatic controls. Remove the 8 nuts (or bolts) and withdraw the immersion heater from the cylinder. Take care when lifting the immersion out of the cylinder and work within safe working practices.

Replacement:
Make sure the Immersion heater gasket face is clean and if necessary replace the gasket (spare part number 95607396). Replace the Immersion heater and make sure the 8 nuts (or bolts) are correctly torqued (20Nm or 14.75 ft/lb) as per the Commercial Immersion heater fitting instructions (36006161). Wire up the immersion heater as per Fig 5 or Fig 6, page 11 or Andrews Flexistor immersion heater fitting instructions. Refill the cylinder and check for leaks. Turn on the supply and set the thermostat temperature to the desired water temperature (60°C - 65°C is recommended).

NOTE: If using fibre gaskets they should be pre-soaked in ambient temperature water for 30 mins before installation and the 8 securing nuts are diametrically tightened to 20 Nm or 0.42psi. White silicone gaskets can be fitted directly.

Wiring (See Figures 4, 5 & 6)

All electrical wiring should be carried out by a competent electrician and be in accordance with the latest I.E.E. Wiring Regulations BS 7671.

DO NOT OPERATE THE IMMERSION HEATER(S) UNTIL THE Andrews Flexistor HAS BEEN FILLED WITH WATER.

Operation
See Fig 4, page 10 for details on how to adjust the temperature setting of the heater.

DO NOT BYPASS THE THERMAL CUT-OUT IN ANY CIRCUMSTANCES.

Commissioning

Filling and flushing the Andrews Flexistor
Ensure that all fittings and immersion heaters are correctly fitted and tightened.

i) Open a hot tap furthest from the Andrews Flexistor.
ii) Open the mains stop cock to fill the unit. When water issues from the tap, allow to run for a few minutes to thoroughly flush through any residue, dirt or swarf, then close tap.
iii) Open successive hot taps to purge any air from the system.
iv) Check all connections for leaks and rectify as necessary.
v) The Strainer housed within the Pressure Reducing Valve should be cleaned to remove any debris that may have been flushed through the main supply pipe.

Check the operation of the Safety Valves

i) Slowly, manually open for a few seconds, the Temperature and Pressure Relief Valve (T&P Valve) situated on the Andrews Flexistor unit. Check water discharged runs freely away through the tundish and discharge pipe work. Close valve, ensure water flow stops and valve reseats correctly.
ii) Repeat for the Pressure Relief Valve.

NOTE: The water discharged may be very hot.

Primary Heat source (when fitted)
Connect up primary heat source as per manufacturers instructions. Fill up primary and secondary circuits, bleeding any air that may be trapped and check for leaks. Make sure secondary circuit has wholesome water only, the Flexistor range of cylinders do not have an internal heat exchanger. Take care that the Primary Heat source can handle the working pressure of the cylinder.

Auxiliary power supply (Immersion Heaters)
Switch on the electrical supply to the immersion heater(s) and allow the unit to heat up. Check that the thermostat operates correctly. A storage temperature of approx. 60ºC is recommended, install and set up immersions as per immersion heater fitting instructions (36006161) . Check that no water is discharged from either the Expansion Valve or Temperature and Pressure Relief Valve during the heating cycle. The thermal cut-out is factory set to 80°C max for direct heating

Benchmark™ Log Book
On completion of the installation and commissioning procedures detailed in this Product Guide the Benchmark™ “Installation, Commissioning and Service Record Log” should be completed and signed off by the competent installer or commissioning engineer in the relevant sections. The various system features, location of system controls, user instructions and what to do in the event of a system failure should be explained to the customer. The customer should then countersign the Benchmark™ commissioning checklist to accept completion. The Service Record should be filled in when any subsequent service or maintenance operation is carried out on the Andrews Flexistor unit.
See pages 32 and 33 for Benchmark™ logbook and service record

Maintenance & Servicing

Maintenance requirements

To ensure the continued optimum performance of the Andrews Flexistor it should be regularly maintained. This is of particular importance in hard water areas or where the water supply contains particulate matter. Maintenance should be carried out by a competent person and any replacement parts used should be authorised Andrews Flexistor spare parts. It is recommended that maintenance is carried out every 12 months and includes the checks detailed below.
In hard water areas consideration should be given to periodically descaling the immersion heater elements. To do this the Andrews Flexistor unit will need to be drained.

Check operation of Safety Valves

Slowly open the Temperature and Pressure Relief Valve by twisting its cap for a few seconds. Check water is discharged and that it flows freely through the tundish and discharge pipe work. Check valve reseats correctly when released.

NOTE: The water discharged may be very hot.

Repeat the procedure for the Pressure Relief Valve.

Inspection

The immersion heater boss can be used as an access for inspecting the cylinder internally.

Clean the strainer

The strainer is incorporated within the Pressure Reducing Valve housing of the Valve. To inspect and clean the strainer:

1. Turn off the isolating valve prior to the Pressure Reducing Valve or the main stop cock to the system.
2. Open the lowest hot tap in the system to relieve the system pressure.
3. Using a spanner unscrew the pressure reducing cartridge and remove the moulded housing. The strainer will be removed with the cartridge.
4. Wash any particulate matter from the strainer under clean running water.
5. Replace the strainer and screw the Pressure Reducing Valve cartridge into the moulded housing.
6. Close hot tap, turn on isolating valve or main stop cock to the system. Check for leaks.

Draining the Cylinder

Switch off the electrical supply to the immersion heater(s) and primary heat source, if used. Turn off the mains water supply to the Andrews Flexistor unit. Attach a hosepipe to the drain valve having sufficient length to take water to a suitable discharge point below the level of the unit, at least one metre below the unit is recommended. Open hot water tap nearest to the Andrews Flexistor to relieve the system pressure. Open drain valve. If water fails to drain from the Andrews Flexistor vent the unit by manually opening the Temperature / Pressure Relief Valve.

Refilling system

DO NOT switch on the immersion heater(s) or primary heat source until the system has been completely refilled.
Close the drain valve. With the hot tap open, turn on mains water supply. When water flows from the hot tap allow to flow for a short while to purge air and to flush through any disturbed particles. Close hot tap and then open successive hot taps in system to purge any air. The electrical supply can now be switched on.

Benchmark™

On completion of any maintenance or service of the Andrews Flexistor, the Benchmark™ “Installation, Commissioning and Service Record”, Pages 32 & 33, should be filled in to record the actions taken and the date the work was undertaken.

Maintenance

Under normal circumstances the control valves should not require any maintenance. However, annual inspection and/or cleaning of the integral strainer , pressure reducing valve cartridge, expansion relief valve cartridge and seating may be necessary depending on local water conditions.

Pressure reducing valve

Isolate cold water supply and drain system if necessary
Unscrew the retaining nut of the valve. The complete operating mechanism, including the strainer can be removed. Clean the filter mesh and cartridge ensuring that the strainer is correctly located and reassemble the unit.

Expansion Valve

Isolate cold water supply
Unscrew expansion relief cartridge from body and clean the filter mesh and cartridge.
Clean valve seat face and seating – do not scratch or damage either seal face or seating,
Refit in reverse order. Do not over tighten.

Warnings

IF WATER DISCHARGES FROM THE TEMPERATURE / PRESSURE RELIEF VALVE ON THE Andrews Flexistor UNIT REFER TO FAULT FINDING TABLE FIRST FOR GUIDANCE. IF THIS DOES NOT RECTIFY THE FAULT SWITCH OFF ELECTRICAL SUPPLY TO THE IMMERSION HEATER(S) [AUXILIARY HEATING] OR SHUT DOWN THE EXTERNAL HEAT SOURCE [IF CONNECTED]. DO NOT TURN OFF THE WATER SUPPLY. CONTACT A COMPETENT INSTALLER FOR UNVENTED WATER HEATERS TO CHECK THE SYSTEM.

DO NOT TAMPER WITH ANY OF THE SAFETY VALVES FITTED TO THE ANDREWS FLEXISTOR SYSTEM, IF A FAULT IS SUSPECTED CONTACT A COMPETENT INSTALLER.

Fault finding

The Fault Finding chart will enable operational faults to be identified and their possible causes rectified. Any work carried out on the Andrews Flexistor unvented water heater and its associated controls MUST be carried out by a competent installer for unvented water heating systems. In case of doubt contact the Andrews Flexistor Service Department.

Fault	Possible Cause	Remedy
No hot water flow	Mains water supply off	Check and open stop cock/isolating valve
	Strainer blocked	Turn off water supply, remove strainer and clean
	Cold water combination valve incorrectly fitted	Check and refit as required
Water from hot tap is cold	Auxiliary immersion heater not switched on	Check and switch on
	Auxiliary immersion heater thermal cut-out has operated	Check, reset by pushing button on thermal cut-out
	External heat source not switched on	Check, turn on external heat source
	External heat source not working	Check heat source operation. If fault is suspected consult heat source manufacturer's instructions
	External heat source thermal cut-out has operated	Check, reset by pushing button on thermal cut-out Check operation of heat source thermostat
Water discharges from overflow visual indicator (tundish)	INTERMITTENTLY	Incorrect pre-charge pressure for expansion vessel
	CONTINUALLY	Check pressure from pressure reducing valve
		Remove expansion relief cartridge from pressure relief valve and check seating. If necessary fit new cartridge
Water discharges from the T&P relief valve intermittently	Expansion relief valve faulty	Check valve and replace if necessary
Water discharges from the T&P relief valve continually	Thermal control failure NOTE: Water will be very hot	Switch off power to immersion heater(s) and shut down external heat source. DO NOT turn off water supply. When discharge stops check all thermal controls, replace if faulty
Performance has deteriorated	GRADUALLY	Check for scale build up in the DHW heat ex-changer

Table 11 - Fault finding guide.

Servicing

Important

i) Servicing should only be carried by an authorised Engineer, Agents or by installers competent in the installation and maintenance of unvented water heating systems.

ii) Any spare parts used MUST be authorised Andrews Flexistor parts.

iii) Disconnect the electrical supply before removing any electrical equipment covers.

iv) NEVER bypass any thermal controls or operate system without the necessary safety valves.

v) Water contained in the Andrews Flexistor unit may be very hot, especially following a thermal control failure. Caution must be taken when drawing water from the unit.

Spare parts

A full range of spare parts are available for the Andrews Flexistor range. Refer to the Technical Data label on the unit to identify the model installed and ensure the correct part is ordered.

Key	Description	Spares Number
1	Immersion Heater Gasket	95611025
2	Blanking Plate Kit	95607396
4	Expansion Vessel 60L 6 Bar	95607445
6	Expansion Vessel 100L 6 Bar	95607458
7	Expansion Vessel 150L 6 Bar	95607461
8	Expansion Vessel 200L 6 Bar	95612723
9	Expansion Vessel 300L 6 Bar	95612724
10	1” Integrated Inlet Control Valve 5-10Bar	95605176
11	Isolating Ball Valve 1”	95605178
12	Isolating Ball Valve 1 1/4”	95605179
13	Isolating Ball Valve 1 1/2”	95605180
14	Isolating Ball Valve 2”	95605181
15	Isolating Drain Valve 1”	95605182
16	Tundish 1 1/2” X 2”	95607452
17	Prv 1 1/4” Set Pressure 1.5 To 6 Bar Max Ip 16 Bar	95605183
18	Prv 1 1/4” Set Pressure 5 To 10 Bar Max Ip 16 Bar	95605184
19	Prv 1 1/2” Set Pressure 1.5 To 6 Bar Max Ip 16 Bar	95605185
20	Prv 1 1/2” Set Pressure 5 To 10 Bar Max Ip 16 Bar	95605186
21	Prv 2” Set Pressure 1.5 To 6 Bar Max Ip 16 Bar	95605187
22	Prv 2” Set Pressure 5 To 10 Bar Max Ip 16 Bar	95605188
23	Single Check Valve 1 1/4”	95605189
24	Single Check Valve 1 1/2”	95605190
25	Single Check Valve 2”	95605191
26	Expansion Relief Valve 1” X 1 1/4” Set Pressure 8 Bar	95605192
27	Expansion Relief Valve 1” X 1 1/4” Set Pressure 13 Bar	95605193
28	Expansion Relief Valve 1 1/4” X 1 1/2” Set Pressure 8 Bar	95605194
29	Expansion Relief Valve 1 1/4” X 1 1/2” Set Pressure 13 Bar	95605195
30	Temperature And Pressure Relief Valve - Set Pressure 10 Bar	7033371
31	Temperature And Pressure Relief Valve - Set Pressure 15 Bar	95605197
32	Dual Control Thermostat	95612650
33	Cut-out thermostat	7031593
34	Rod thermostat	95980025
35	Pump 3 speed circulation up 20-30n	95607366
36	Pump 3 speed circulation ups 15-50n 130	95607404
37	28mm pump isolating valve	95605177
38	1/2” blanking stat pocket	95607690
40	Expansion vessel 60l 10 bar	95607446
41	Expansion vessel 100l 10 bar	95607459
42	Expansion vessel 150l 10 bar	95607462
43	Expansion vessel 200l 10 bar	95612725
44	Expansion vessel 300l 10 bar	95612726
45	1” integrated inlet control valve 1-6bar	95605109
46	Over temperature rod thermostat	95980009
48	2” BSP blanking plug	7038680

Accessories

Immersions	Part number
6kW Commercial Immersion - Single phase	94110301
9kW Commercial Immersion - Single phase	94110302
12kW Commercial Immersion - Three phase	94110303
18kW Commercial Immersion - Three phase	94110304
24kW Commercial Immersion - Three phase	94110305
30kW Commercial Immersion - Three phase	94110306
36kW Commercial Immersion - Three phase	94110307
45kW Commercial Immersion - Three phase	94110308
54kW Commercial Immersion - Three phase	94110309
Busbar Conversion Kit	94970110
De-Stratification loop kit - 400-500 litre	95970140
De-Stratification loop kit - 800-1450 litre	95970157
De-Stratification loop kit - 2000-2500 litre	95970158
Temperature gauge	95970141
Pressure gauge	95970142
Temperature gauge (calibrated)	95970017
Pressure gauge (calibrated)	95970016
Flexistor 400/500L 6 bar cold water control kit	7038498
Flexistor 800L 6 bar cold water control kit	7038499
Flexistor 1000L 6 bar cold water control kit	7038500
Flexistor 1250L 6 bar cold water control kit	7038501
Flexistor 1450L 6 bar cold water control kit	7038502
Flexistor 2000/2500L cold water control kit	7038503
Flexistor 400/500L 10 bar cold water control kit	7038504
Flexistor 800L 10 bar cold water control kit	7038505
Flexistor 1000L 10 bar cold water control kit	7038506
Flexistor 1250L 10 bar cold water control kit	7038507
Flexistor 1450L 10 bar cold water control kit	7038508
Flexistor 2000/2500L 10 bar cold water control kit	7038509

1

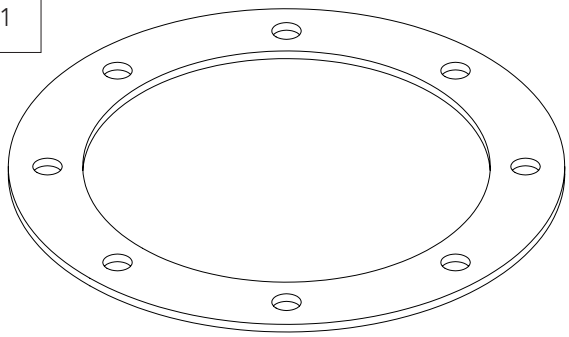

Part No:	95:611:025

2

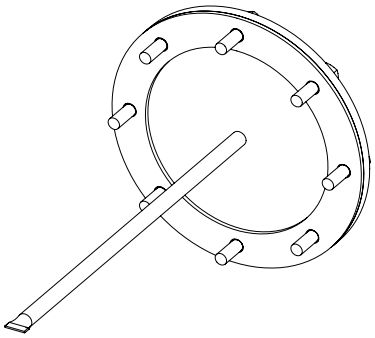

Part No:	95:607:396

4-9
43-47

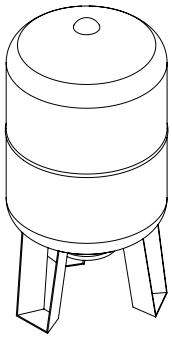

Part No:	95:607:_ _ _

10-48

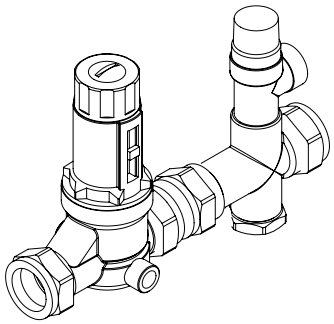

Part No:	95:605:_ _ _

11-14

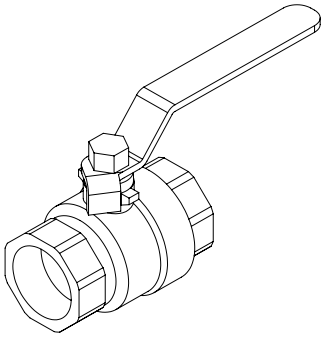

Part No:	95:605:_ _ _

15

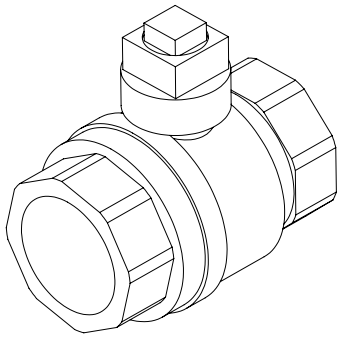

Part No:	95:605:182

16

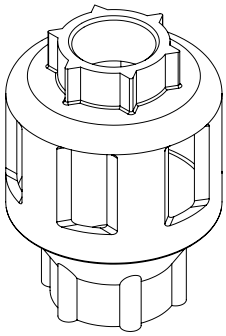

Part No:	95:607:452

17-22

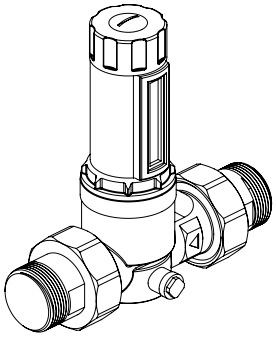

Part No:	95:605:_ _ _

23-25

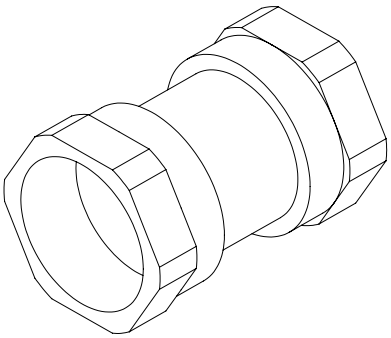

Part No:	95:605:_ _ _

26-29

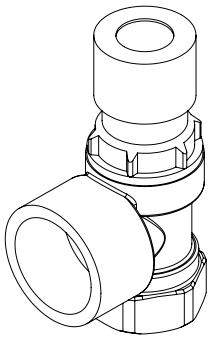

Part No:	95:605:_ _ _

30-31

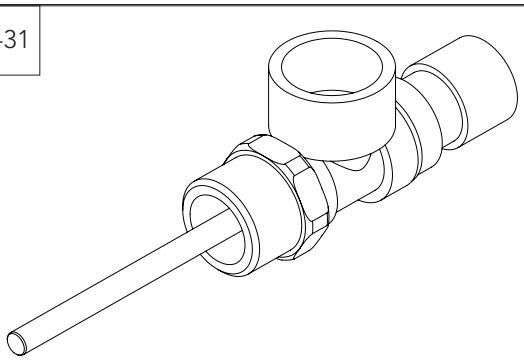

Part No:	95:605:_ _ _

32

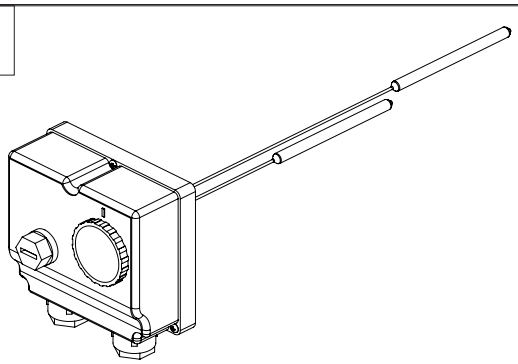

Part No:	95:612:650

33

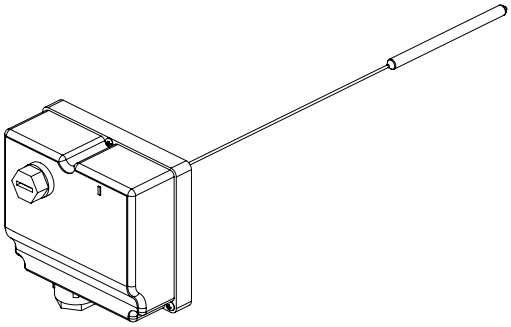

Part No:	7031593

34

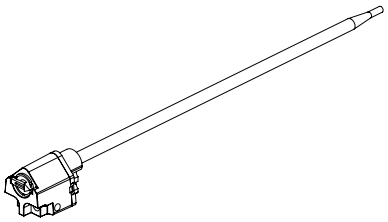

Part No:	95:980:025

35&36

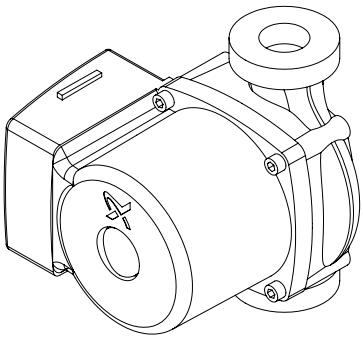

Part No:	95:607:_ _ _

37

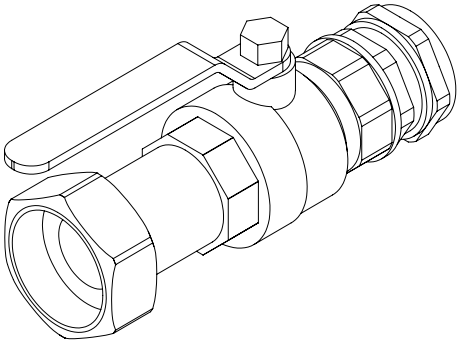

Part No:	95:605:177

38	
Part No:	95:607:690

46	
Part No:	95:980:009

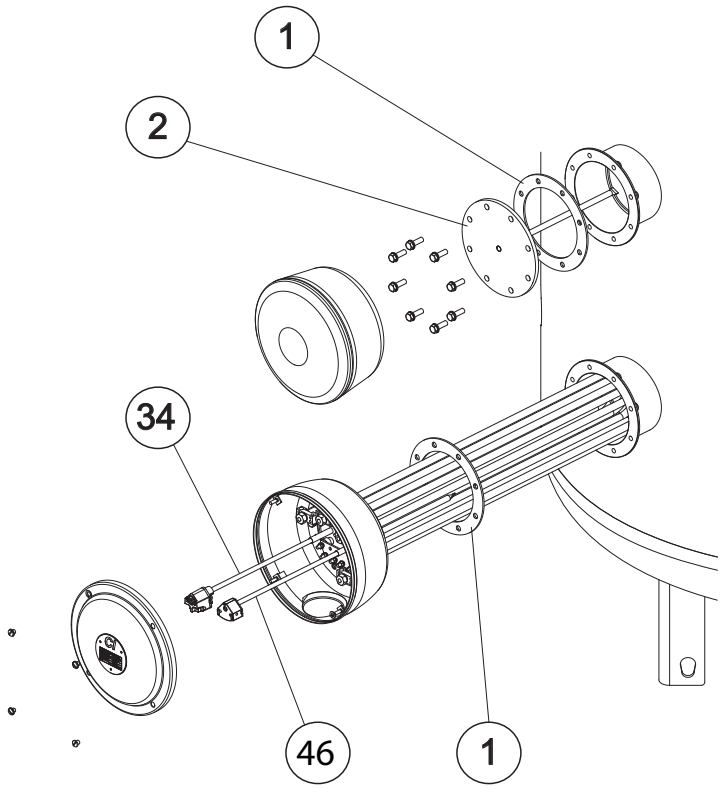

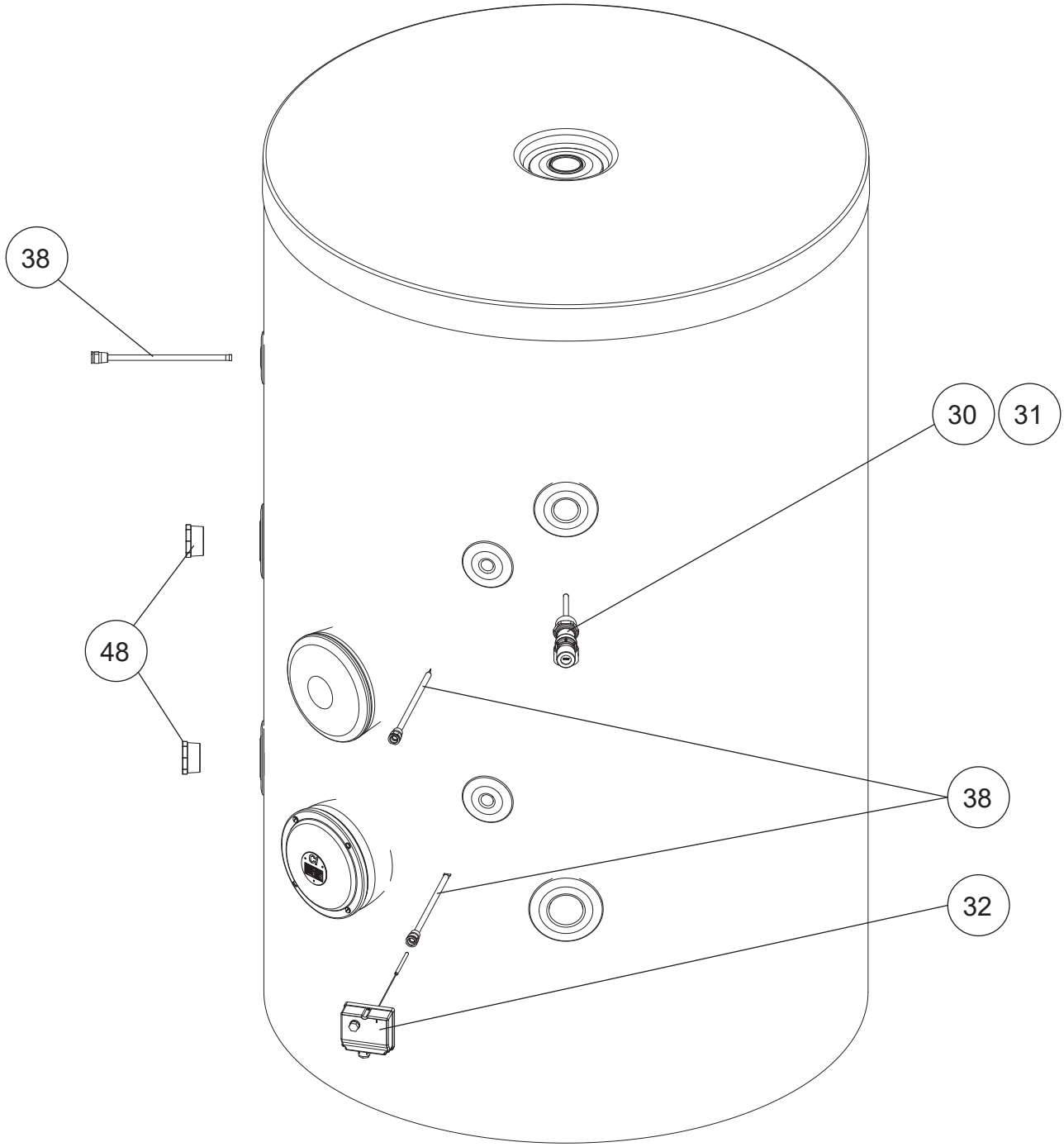
38
30
31
48
38
32

MAINS PRESSURE HOT WATER STORAGE SYSTEM COMMISSIONING CHECKLIST

This Commissioning Checklist is to be completed in full by the competent person who commissioned the storage system as a means of demonstrating compliance with the appropriate Building Regulations and then handed to the customer to keep for future reference.

Failure to install and commission this equipment to the manufacturer's instructions may invalidate the warranty but does not affect statutory rights.

Customer Name _____ Telephone Number _____

Address _____

Cylinder Make and Model _____

Cylinder Serial Number

Commissioned by *(print name)* _____ Registered Operative ID Number _____

Company Name _____ Telephone Number _____

Company Address _____

_____ Commissioning Date _____

To be completed by the customer on receipt of a Building Regulations Compliance Certificate*:

Building Regulations Notification Number *(if applicable)* _____

ALL SYSTEMS PRIMARY SETTINGS (indirect heating only)

Is the primary circuit a sealed or open vented system?	Sealed ☐	Open ☐	
What is the maximum primary flow temperature?			°C

ALL SYSTEMS

What is the incoming static cold water pressure at the inlet to the system?				bar
Has a strainer been cleaned of installation debris (if fitted)?	Yes ☐		No ☐	
Is the installation in a hard water area (above 200ppm)?	Yes ☐		No ☐	
If yes, has a water scale reducer been fitted?	Yes ☐		No ☐	
What type of scale reducer has been fitted?				
What is the hot water thermostat set temperature?				°C
What is the maximum hot water flow rate at set thermostat temperature (measured at high flow outlet)?				l/min
Time and temperature controls have been fitted in compliance with Part L of the Building Regulations?			Yes ☐	
Type of control system (if applicable)	Y Plan ☐	S Plan ☐	Other ☐	
Is the cylinder solar (or other renewable) compatible?	Yes ☐		No ☐	
What is the hot water temperature at the nearest outlet?				°C
All appropriate pipes have been insulated up to 1 metre or the point where they become concealed			Yes ☐	

UNVENTED SYSTEMS ONLY

Where is the pressure reducing valve situated (if fitted)?				
What is the pressure reducing valve setting?				bar
Has a combined temperature and pressure relief valve and expansion valve been fitted and discharge tested?	Yes ☐		No ☐	
The tundish and discharge pipework have been connected and terminated to Part G of the Building Regulations			Yes ☐	
Are all energy sources fitted with a cut out device?	Yes ☐		No ☐	
Has the expansion vessel or internal air space been checked?	Yes ☐		No ☐	

THERMAL STORES ONLY

What store temperature is achievable?		°C
What is the maximum hot water temperature?		°C

ALL INSTALLATIONS

The hot water system complies with the appropriate Building Regulations	Yes ☐
The system has been installed and commissioned in accordance with the manufacturer's instructions	Yes ☐
The system controls have been demonstrated to and understood by the customer	Yes ☐
The manufacturer's literature, including Benchmark Checklist and Service Record, has been explained and left with the customer	Yes ☐

Commissioning Engineer's Signature _____

Customer's Signature _____

(To confirm satisfactory demonstration and receipt of manufacturer's literature)

*All installations in England and Wales must be notified to Local Authority Building Control (LABC) either directly or through a Competent Persons Scheme. A Building Regulations Compliance Certificate will then be issued to the customer.

benchmark COLLECTIVE MARK
THE MARK OF QUALITY FOR THE INSTALLATION, COMMISSIONING AND SERVICING OF DOMESTIC HEATING AND HOT WATER SYSTEMS

©Heating and Hotwater Industry Council (HHIC)

www.centralheating.co.uk

SERVICE RECORD

It is recommended that your hot water system is serviced regularly and that the appropriate Service Record is completed.

Service Provider
Before completing the appropriate Service Record below, please ensure you have carried out the service as described in the manufacturer's instructions.

SERVICE 1 Date
Engineer Name
Company Name
Telephone Number
Comments
Signature

SERVICE 2 Date
Engineer Name
Company Name
Telephone Number
Comments
Signature

SERVICE 3 Date
Engineer Name
Company Name
Telephone Number
Comments
Signature

SERVICE 4 Date
Engineer Name
Company Name
Telephone Number
Comments
Signature

SERVICE 5 Date
Engineer Name
Company Name
Telephone Number
Comments
Signature

SERVICE 6 Date
Engineer Name
Company Name
Telephone Number
Comments
Signature

SERVICE 7 Date
Engineer Name
Company Name
Telephone Number
Comments
Signature

SERVICE 8 Date
Engineer Name
Company Name
Telephone Number
Comments
Signature

SERVICE 9 Date
Engineer Name
Company Name
Telephone Number
Comments
Signature

SERVICE 10 Date
Engineer Name
Company Name
Telephone Number
Comments
Signature

User Guide

25 year Warranty Terms and Conditions

WARNING: Should the factory fitted temperature and pressure relief valve be tampered with or removed your guarantee will be invalidated. Neither the Distributor nor Manufacturer shall be responsible for any consequential damage howsoever caused.

Warranty Terms

Andrews commercial guarantees the product against faulty manufacture or materials for a period of two years from the date of purchase including parts and labour. This two year guarantee is extended to five years for the cold water control valve and to 25 years (from the date of installation) for the stainless steel inner vessel.

These guarantees are valid provided that:

- The unvented water heater has been installed by a competent engineer and as per the instructions contained in the installation manual and all relevant Codes of Practice and Regulations in force at the time of installation.
- Any disinfection has been carried out in accordance with BS EN 806
- Should the factory fitted temperature and pressure relief valve be tampered with or removed your guarantee will be invalidated.
- The Andrews water heater unit has not been modified in anyway other than by approved engineers.
- The Andrews water heater unit has only been used for the storage of wholesome sanitary water (max 250mg/l chloride).
- Only stainless steel dummy plugs are to be used.
- The Andrews water heater has not been subjected to excessive pressure beyond the guidelines detailed in the installation instructions.
- The Andrews water heater has not been subjected to frost, nor has it been tampered with or been subject to misuse or neglect.
- No factory fitted parts have been removed for unauthorised repair or replacement
- Regular maintenance has been carried out by a competent person in accordance with the requirements set in the maintenance section of the installation manual and any replacement parts used should be approved spare parts.
- The original warranty period will apply to any parts replaced

The warranty does NOT cover:

Any consequential damages or profit loss which may arise from a defect.
Warranty claims have no delaying effect on the payment dates and other demands

Your Andrews Commercial warranty covers you for a direct replacement and labour in the event that the unit fails prematurely as a result of a proved manufacturing defect.

Andrews is not responsible for any damage that has been caused by incorrect or defective installation, commissioning, water treatment, service or maintenance. Our current technical documentation can be taken as the basis for this.

In order that this can be achieved, full access to replace the unit is essential. If it is found that access can not be achieved the warranty will be limited to the replacement of the unit only and subsequent labour charges would not be met under the warranty.

The Environment

This product is made from many recyclable materials, therefore at the end of its useful life it should be disposed of at a local authority recycling centre in order to realise the full environmental benefits. Insulation is by means of an approved HCFC/CFC free polyurethane foam.

WEEE Declaration

Disposal of Waste Equipment by Users in Private Households in the European Union.

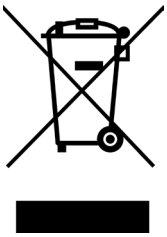

This symbol on the product indicates that this product must not be disposed of with your other household waste. Instead, it is your responsibility to dispose of your waste equipment by handing it over to a designated collection point for the recycling of waste electrical equipment. The separate collection and recycling of your waste equipment at the time of disposal will help to conserve natural resources and ensure that it is recycled in a manner that protects human health and the environment. For more information about where you can drop off your waste equipment for recycling, please contact your local city office, your household waste disposal service or the company where this product was purchased.

Spares stockists

Customer service

Telephone

0345 070 1055

Register now to activate your warranty www.andrewswaterheaters.co.uk/register-a-warranty. Please make sure you attach proof of purchase for your warranty to be monitored.

All descriptions and illustrations provided in this document have been carefully prepared but we reserve the right to make changes and improvements in our products which may affect the accuracy of the information contained in this leaflet. All goods are sold subject to our standard Conditions of Sale which are available on request.

Customer support

8am-5pm, Monday-Friday

Tel 0345 070 1055

Web andrewswaterheaters.co.uk

linkedin.com/company/andrews-water-heaters

@AndrewsWH

ICOM Energy Association

INVESTORS IN PEOPLE | Bronze

ISO 9001 Quality Management ISO 14001 Environmental Management

RS 33961

INDUSTRIAL ASSOCIATE

CIBSE PATRONS

ANDREWS WATER HEATERS

Andrews. Built to perform.

a Baxi Heating brand

Registered office address: Andrews Water Heaters 3 Innovation House, Oaklands Business Centre, Oaklands Park, Wokingham RG41 2FD

7038476_issue _04